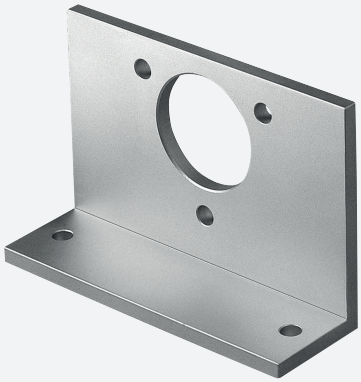

Angled flange

9301

Dimensions

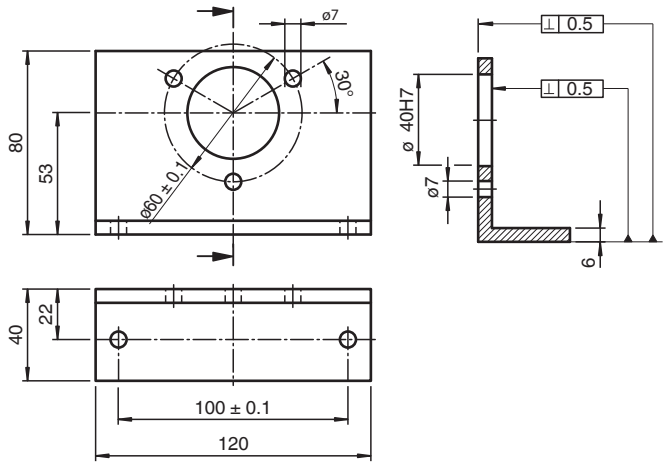

Release date: 2022-04-21 Date of issue: 2022-12-12 Filename: 045029_eng.pdf