Mounting plate
MH-F64-02

- Simple and fast mounting

Mounting base for F64 series

Dimensions

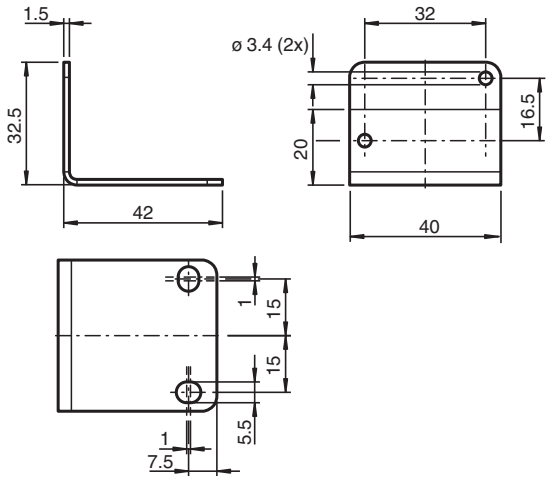

Technical Data

Mechanical specifications	
Material	stainless steel AISI 304L
Mass	31 g
Dimensions	
Height	32.5 mm
Width	40 mm
Depth	42 mm
Mounting	2 screws M3 x 8
General information	
Packing unit	1 item(s)

Release date: 2023-11-16 Date of issue: 2023-11-20 Filename: 306351_eng.pdf