support plate
ACC-TOR-ENI90HD-120

Support plate 120 mm, straight

Dimensions

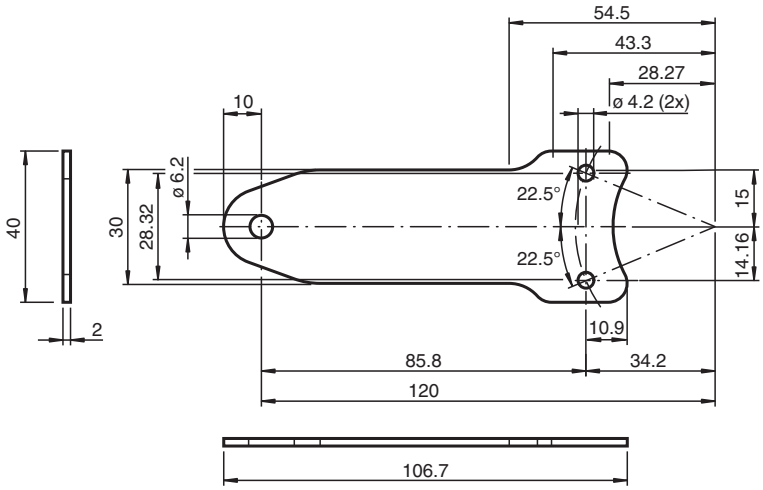

Technical Data

Mechanical specifications	
Material	Stainless steel 1.4571 / AISI 316Ti
General information	
Scope of delivery	1 Support plate 120 mm, straight 2 x washer M4 (ISO 7089) 2 x hexagon head screw M4 x 8 (ISO 4017)

Release date: 2022-07-01 Date of issue: 2022-12-12 Filename: 70118823_eng.pdf