Spring plate
ACC-TOR-ENI58IL-LA

Spring plate single extra long for ENI58IL for larger distance to mounting point

Dimensions

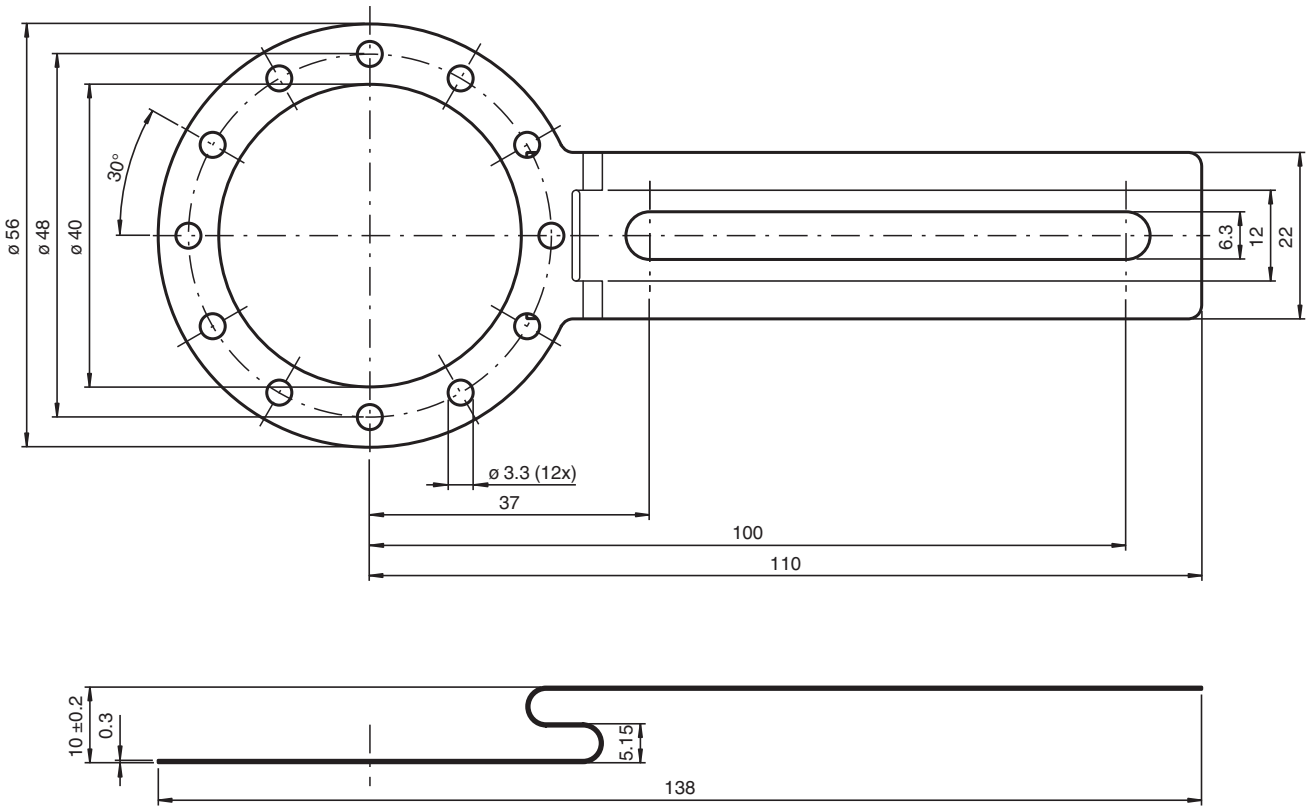

Technical Data

General information

Scope of delivery	1 Spring plate single, extra long 4 screws M3 x 6 4 washers 1 Hexagon socket wrench

Release date: 2022-11-15 Date of issue: 2022-12-12 Filename: 70156637_eng.pdf